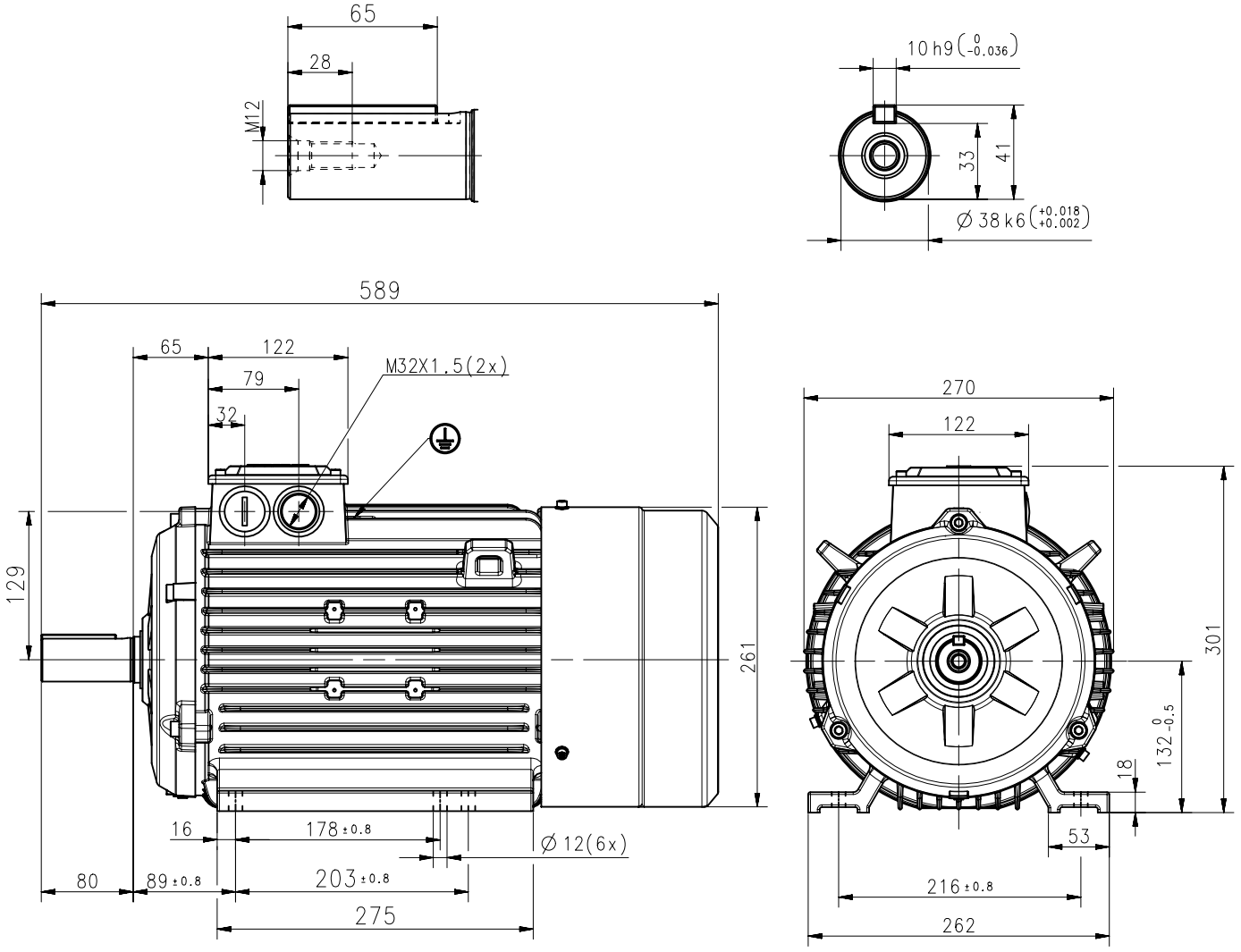

Additional information:

Dimension Print	Motor type: IE3 M2BAX 132ML_4-6 B3, B6, B7, B8, V5, V6	Document No: 3GZC500013-77 C

Description: STANDARD SQUIRREL CAGE MOTOR

Unit: IEC LV Motors Date: 13-Feb-2023	Issued by: Winifred Zi Approved by: Serena Wang	Replaces: Replaced by:
ABB	Customer Reference:	